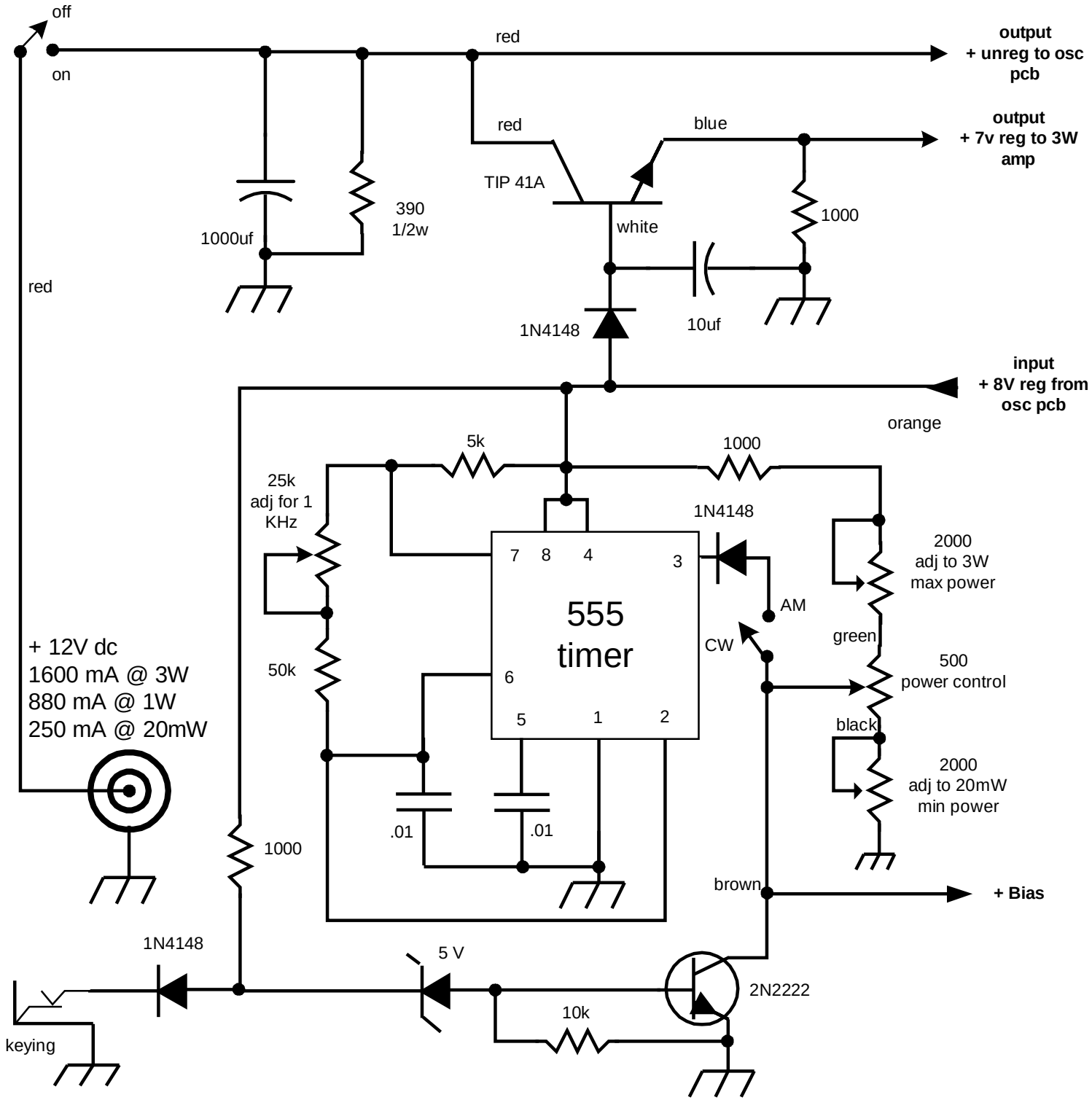
off
on
red
output
+ unreg to osc
pcb
red
blue
output
+ 7v reg to 3W
amp
TIP 41A
390
1/2w
1000uf
white
1000
red
1N4148
10uf
input
+ 8V reg from
osc pcb
orange
5k
1000
25k
adj for 1
KHz
1N4148
7
8
4
3
555
timer
AM
2000
adj to 3W
max power
CW
green
+ 12V dc
1600 mA @ 3W
880 mA @ 1W
250 mA @ 20mW
50k
6
500
power control
5
1
2
black
2000
adj to 20mW
min power
.01
.01
1000
brown
+ Bias
1N4148
5 V
2N2222
10k
keying