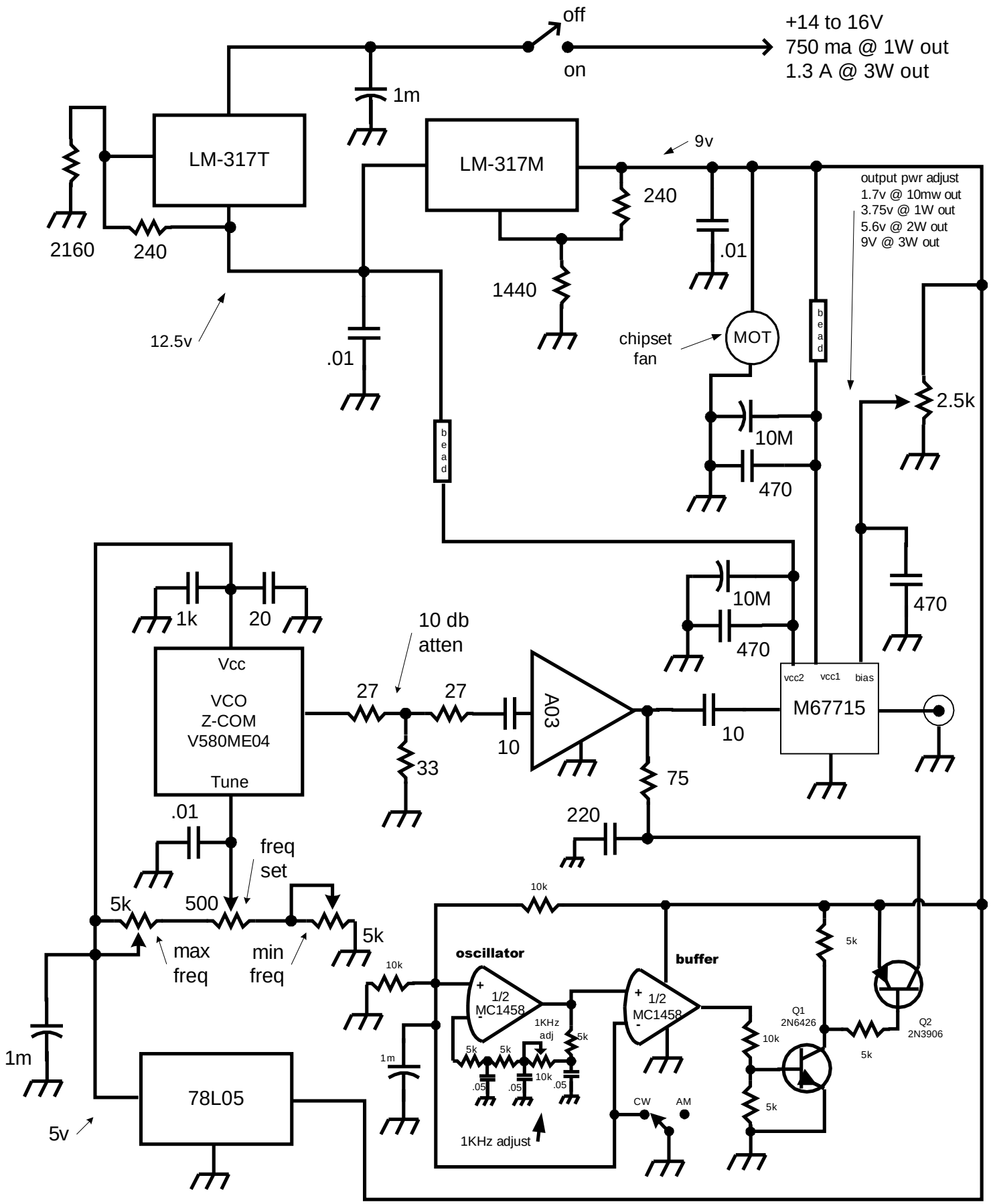
off
on
+14 to 16V
750 ma @ 1W out
1.3 A @ 3W out
1m
LM-317T
LM-317M
9v
240
2160
240
.01
1440
12.5v
.01
chipset
fan
MOT
bead
output pwr adjust
1.7v @ 10mw out
3.75v @ 1W out
5.6v @ 2W out
9V @ 3W out
2.5k
10M
470
bead
10M
470
470
1k
20
10 db
atten
Vcc
VCO
Z-COM
V580ME04
Tune
27
27
33
10
A03
10
75
220
vcc2
vcc1
bias
M67715
.01
freq
set
5k
500
5k
max
freq
min
freq
10k
oscillator
buffer
10k
1/2
MC1458
1KHz
adj
5k
5k
5k
.05
.05
10k
.05
1m
1/2
MC1458
5k
Q1
2N6426
Q2
2N3906
10k
5k
5k
CW
AM
1KHz adjust
1m
78L05
5v